FASHION OUTLETS OF CHICAGO

ADDENDUM LOG

October, 2011
Manual generated

November, 2011
Talisman revisions (11.3.11.pdf)

September, 2013
Design Submittal Process -Mall Location Plan - content added (k11)
Mall Location Sample Template added (k12)

TABLE OF CONTENTS

GENERAL KIOSK INFORMATION
- General Information k4

KIOSK DESIGN CRITERIA
- Counter/Display k5
- Materials k6
- Required Corner Detail k7

TECHNICAL CRITERIA
- Lighting, Electrical, Plumbing and Mechanical k8

KIOSK SIGNAGE
- General Signage Requirements k9-k10

DESIGN SUBMISSION
- Submittal Process k11
- Mall Location Sample Template k12

GENERAL INFORMATION

Freestanding retail kiosks are planned throughout the common areas and are designed as “pavilions” within these areas. The standard kiosk size shall not exceed the footprint illustrated on the Lease Outline Drawing. Kiosk locations may not impede upon the mall exit widths.

It is important that kiosks complement the common areas, as well as provide visibility and individuality to merchandise displays. Primary emphasis is on creativity, individuality, dynamic and three dimensional variety, quality materials, and most of all, a strong retail image.

Particular attention will be given to all aspects of the Tenant’s design due to the high visibility of the lease space from all sides. Tenants will be challenged to create unique design concepts in their finishes, lighting, signage and merchandising displays.

This criteria will act as a guide for the design of all work to be installed by Tenants in conjunction with the provisions of the Tenant’s lease with the Landlord. The Landlord’s interpretation of this criteria is final and governing.

COUNTER / DISPLAY

Counter design plays an important role in the perception of the overall kiosk quality. It establishes the framework for displays and is the element that comes into the closest contact with customers. Counters are the kiosk Tenant's "storefront" and will be subject to the most scrutiny for design compliance.

The Tenant is encouraged to combine multiple display methods into an organized and balanced counter. Variations on counter design are encouraged and will be considered by the Landlord during the review process.

Specific Requirements:

- Counter face cannot be on one plane. Design must include areas that pop in and pop out to create movement. This can be achieved by recessing a small portion of the counter face by a few inches or can be more dramatic.
- Counter face cannot be all one material. Must incorporate a minimum of two to three different types of material that coordinate well together.
- Vertical element can include a plasma screen or an LCD screen menu board or can have additional vertical signage. Maximum allowed size is 30" x 96" high.
- General counter height shall be 3'-6" maximum; counter height may extend to 4'-6" maximum in limited areas. Counter design, including height, must meet accessibility guidelines enforced by national or local jurisdictions including the Americans with Disabilities Act.
- Varying counter heights are required. Maximum counter height is 4'- 6".
- The center island is optional and may reach a maximum height of 5'-6".
- Displays and display fixtures are to be incorporated into the kiosk built form.
- Cash registers and other equipment must be recessed such that at no point will they extend more than 9" above the counter. Projections and displays are not allowed outside the kiosk perimeter.
- Storage shall be concealed from public view.
- Graphic light boxes are encouraged and may be required, but must be integral to the shop design and construction.
- Counters are to have a 4" high base of ceramic tile, stone or metal (not plastic laminate, wood or rubber) in areas exposed to mall maintenance equipment. Plastic laminate is not allowed on front counter tops.
- Overhead structures will be considered by Landlord based on their location relative to other in-line and kiosk retailers.

A MINIMUM DISTANCE OF 20' WILL BE REQUIRED BETWEEN KIOSKS WITH OVERHEAD STRUCTURES AND ALL OTHER RETAILERS.

- Overhead structures must be designed to enhance the overall look of the kiosk. Overhead structures used for track lighting and sign placement only will not be allowed. The final decision to allow overhead structures will be at Landlord's discretion.
- Signs are not to extend above 8'-0" above finish floor.

MATERIALS

The Mall is constructed of high quality, commercial grade materials. Kiosk Tenants must utilize materials that are upscale in quality, resist wear and dirt penetration and are easily maintained. It is in the best interest of Tenants and Landlord that display cases are constructed of the most durable and highest quality materials.

ENCOURAGED MATERIALS in areas visible to the public:

Counter Tops

- Ceramic Tile
- "Corian" or similar
- Metal - stainless or painted steel, brass, copper, aluminum
- Natural Stones - marble, granite, slate
- Glass

Counter Fronts

- Ceramic Tile
- Glass block
- Fiberglass-reinforced concrete fabrications
- Casework-quality hardwood
- Metal - stainless or painted steel, brass, copper, aluminum
- Natural stones - marble, granite, slate
- Glass

Interiors

- Solid color plastic laminate
- Casework-quality hardwood
- Metal - stainless steel, brass, copper, aluminum
- Fabrics

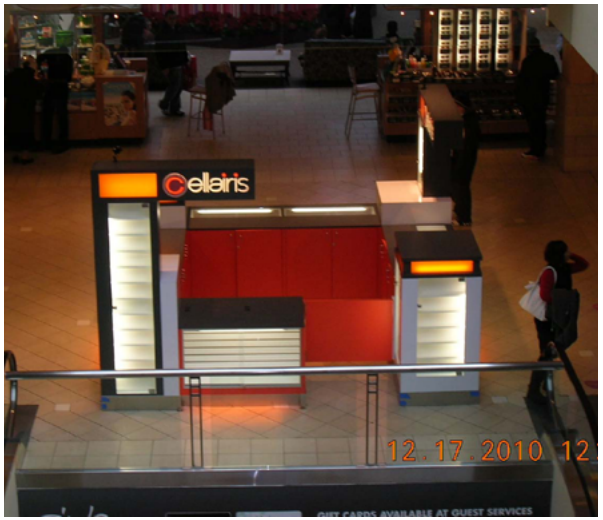

PROHIBITED MATERIALS in areas visible to the public:

- Plastic laminates
- Slatwall display systems
- Pegboard
- Mirror
- Shingles, wood siding, cork, carpet
- Simulated brick and wood
- Vinyl and paper wallcovering
- Sheet or modular vinyl
- 4x4, 6x6, 12x12 tiles
- Glazed tiles
- Other materials deemed unacceptable by the Landlord

MATERIALS (cont'd.)

REQUIRED CORNER DETAIL

Required for all wood veneer and similar products.

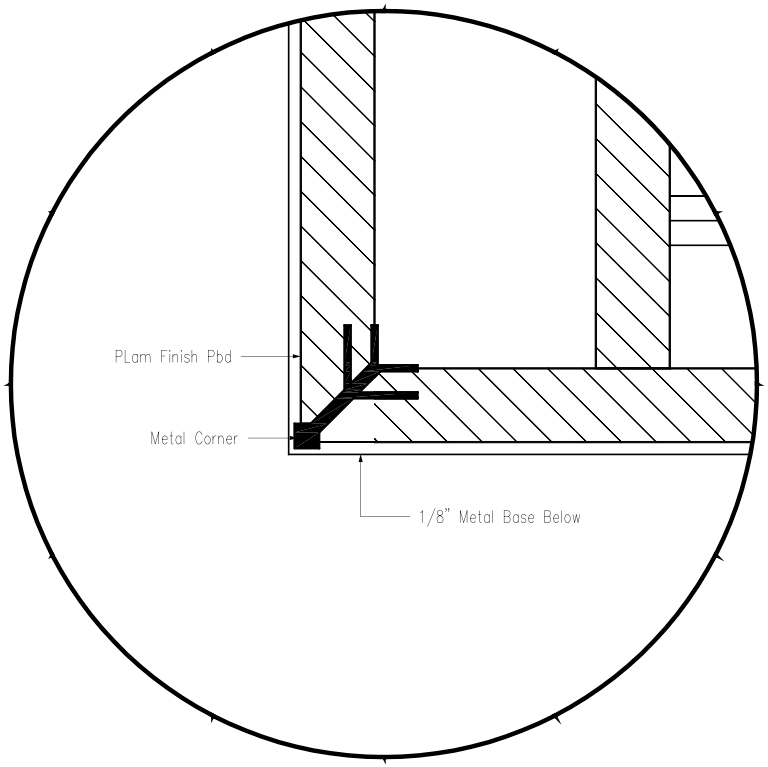

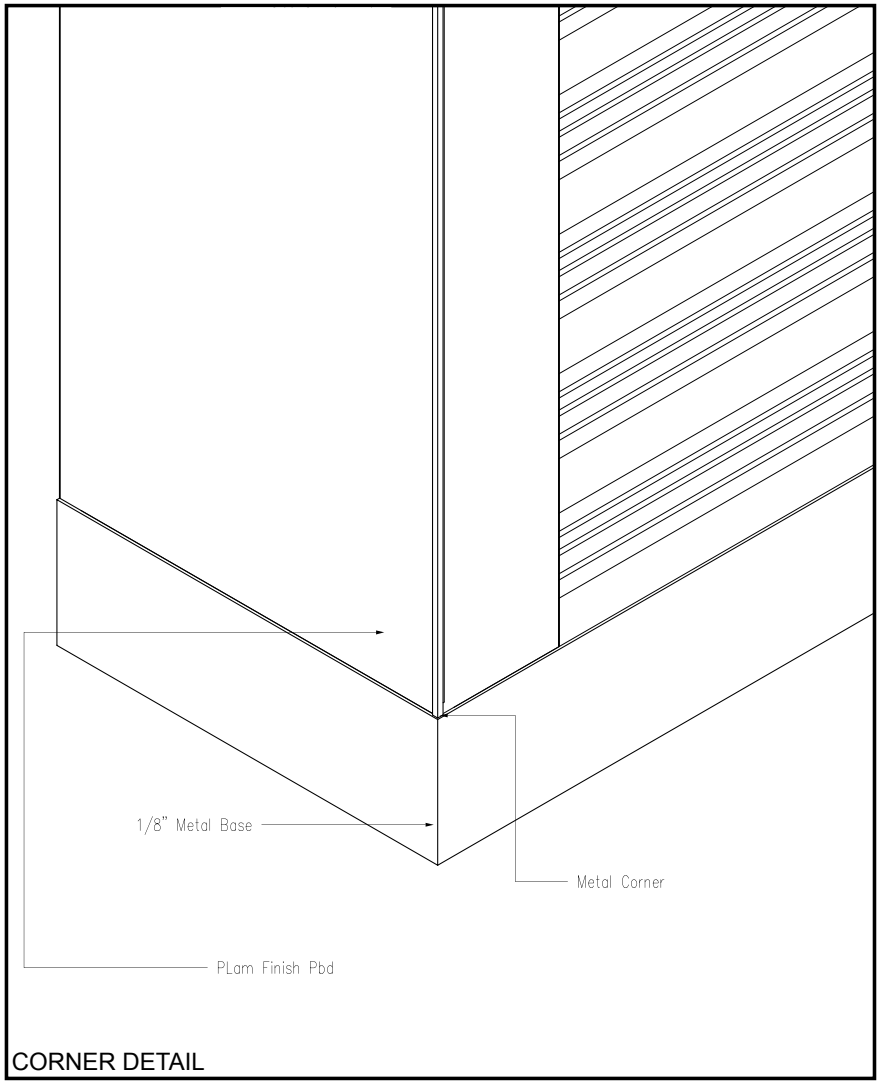

CORNER DETAIL

LIGHTING, ELECTRICAL, PLUMBING and MECHANICAL

KIOSK LIGHTING

Display lighting is to be emphasized for kiosks. Dramatic contrast is to feature displays from the counter area. Display cases must be adequately lighted and ventilated. This will set apart key displays, as well as distinguish the kiosk from general mall common areas.

Specific Requirements:

NO OVERHEAD LIGHT TRACKS ARE ALLOWED.

Decorative light fixtures may be required to enhance the design theme. Dramatic display lighting is required to contrast and feature displays from the counter and mall common areas.

ELECTRICAL

- Tenant's electrical equipment shall be fully contained within kiosk and concealed to public view.
- All electrical equipment, fixtures and installation shall be UL listed.
- All wiring, junction boxes and other connections shall be fully concealed.
- All electrical wiring to be in conduit.
- Type AC (metal clad) cable is required. Ridged conduits are required for all conductors.

PLUMBING

- Water, gas and sewer connections are not available at all kiosks.
- All plumbing connections shall be fully concealed.
- All plumbing fixtures, equipment and piping shall be contained within Tenant's premises.
- Waterproof membrane is required for all kiosks requiring plumbing.

MECHANICAL

Typically ventilation and air conditioning are provided through the mall common area HVAC system. However, specific uses such as food or odor producing kiosks may require additional ventilation at Tenant's expense.

SIGNAGE

Tenants must provide and install an identity sign for their kiosk. Signs are to be compatible with the overall kiosk design concept and must receive the same quality of design and construction as the rest of the Tenant work. Identity signs are to state the store name and/or logo, and may not advertise or list items sold. Sign shop drawings for all signs, logos and graphics visible from the Common Area are to be submitted for Landlord design review.

Specific Requirements:

- Sign mounted on a pole will not be allowed. Tenant sign must be integrated within the overall kiosk design.
- All signage must be three-dimensional and be illuminated by a light source fully integrated with the architecture of the Kiosk.
- Signage and graphics design and placement shall complement the overall “kiosk shop” design
- Signage is limited to a maximum of one (1) double-faced Primary Sign, with face oriented perpendicular to the main axis of the mall common area.
- Wording of the primary signage shall be limited to the Tenant‘s DBA name, and shall not include specification of merchandise sold or services rendered, regardless of Tenant’s “legal name.”

SIGNAGE (Cont.)

SIGN DESIGN CRITERIA INCLUDE:

- Sign height: 8” high max. letter
- Letters: individual, three-dimensional, minimum depth of ½”
- Signs are not to extend above 8’above finish floor.
- Signs are to be graphic and imaginative. Specialty letter styles, graphic flourishes and dynamic graphics are expected.
- Signs must be equal in quality of design with nearby tenant storefronts. Overly demanding signs are not permitted.
- Sign form, scale and proportion are to balance with the overall kiosk design.
- High quality fabrications are required. Attachment devices, fasteners and other mechanisms are to be concealed.
- Signs must comply with all codes and regulations and must have current sign permits. Manufacturer labels are not to be visible.

The Following Sign Types Are Encouraged for Kiosk Tenants:

- 3-D wood letters
- Cast metal letters, raised
- Silk-screened glass or metal panels

The Following Sign Types Are Not Permitted:

- Neon
- Internally illuminated channel letters
- Signs designed as standard rectangular box or cabinet construction
- Signs with animated components
- Flashing, scintillating, odor-producing
- Paper, cardboard, styrofoam
- Vinyl lettering of any kind
- Credit card and advertising placards, decals, stickers, trademarks

DESIGN SUBMITTAL PROCESS

Electronic .pdf files are required for the Design Submittal Process. Please submit all electronic submissions to Tenant Coordination at: tcsantamonica@macerich.com.

Sample Board

- Provide actual samples of all Tenant materials, colors and finishes visible to the public, on a clearly labeled 8 ½" x 11" illustration board.
- Color Rendering Perspective
- Provide a complete depiction of the proposed kiosk shop, including all graphics and signage. Any photographs of a Tenant's existing kiosk that relate to Tenant's proposed design may be submitted instead.
- Construction Drawings
- Architectural Drawings
- Floor plan, fully detailed and scaled, showing all components, counters, partitions, cashwraps, islands, etc.
- All finishes and fixtures, with complete schedule, keyed to plans.
- Details and sections through each side and overall.
- Elevations of all sides.
- Details and sections of all special conditions.
- All sign locations.
- Anything necessary to describe any structures or design features not depicted or easily understood.

Electrical Drawings

- The Tenant will provide electrical system, and all equipment, fixtures and accessories for their kiosk.
- Plumbing Drawings (if applicable)
- Plumbing diagram
- Isometric
- Fixture schedule

Construction Requirements

Permits

- Tenant to provide mall location plan with submittals per sample template on page #12
- The Landlord's design review process is independent of local permitting for construction. The tenant is responsible for procurement of all permits and compliance with all local, state, and federal codes and requirements.
- All designs, plans and finished products must comply with all accessibility guidelines enforced by national or local jurisdictions and the Americans with Disabilities Act.
- All Tenant improvements must comply with the current governing building codes. The Tenant shall determine the jurisdiction and comply with all applicable code requirements. Plan check, building permits, sewer connection charges, and other local, state, and federal charges in connection with Tenant's work shall be at the Tenant's expense.
- Copies of all Permits must be provided to the Mall Management Office prior to the start of work.
- All Tenants involved in food sales or service shall submit plans for review and approval by the local health department.

Insurance and Deposits

Contact the Mall Management Office for Contractor Insurance and Security Deposit information and requirements. Refer to the overall "Construction Rules and Regulations for Tenant's Contractors" on The Macerich Company website at www.macerich.com for complete insurance and deposit information.

Contractor Check-in

- All kiosk shop and sign installation must be coordinated with the Mall Management Office prior to initiation of any work by the Tenant and/or his subcontractors.
- Each Tenant shall submit to the Mall Management Office copies of the Contractor's insurance statements, Building Permit, Contractor's license, Landlord Approved Set of Plans and any required fees.
- All permits and plan check fees shall be obtained by the Tenant, at the Tenant's sole cost and expense.
- Installation shall be in accordance with the approved drawings. Any deviations must have specific Landlord approval.
- Tenant's contractor must repair ANY/ALL damage caused by his work.
- Tenant is responsible for the operation of the Tenant's contractor.
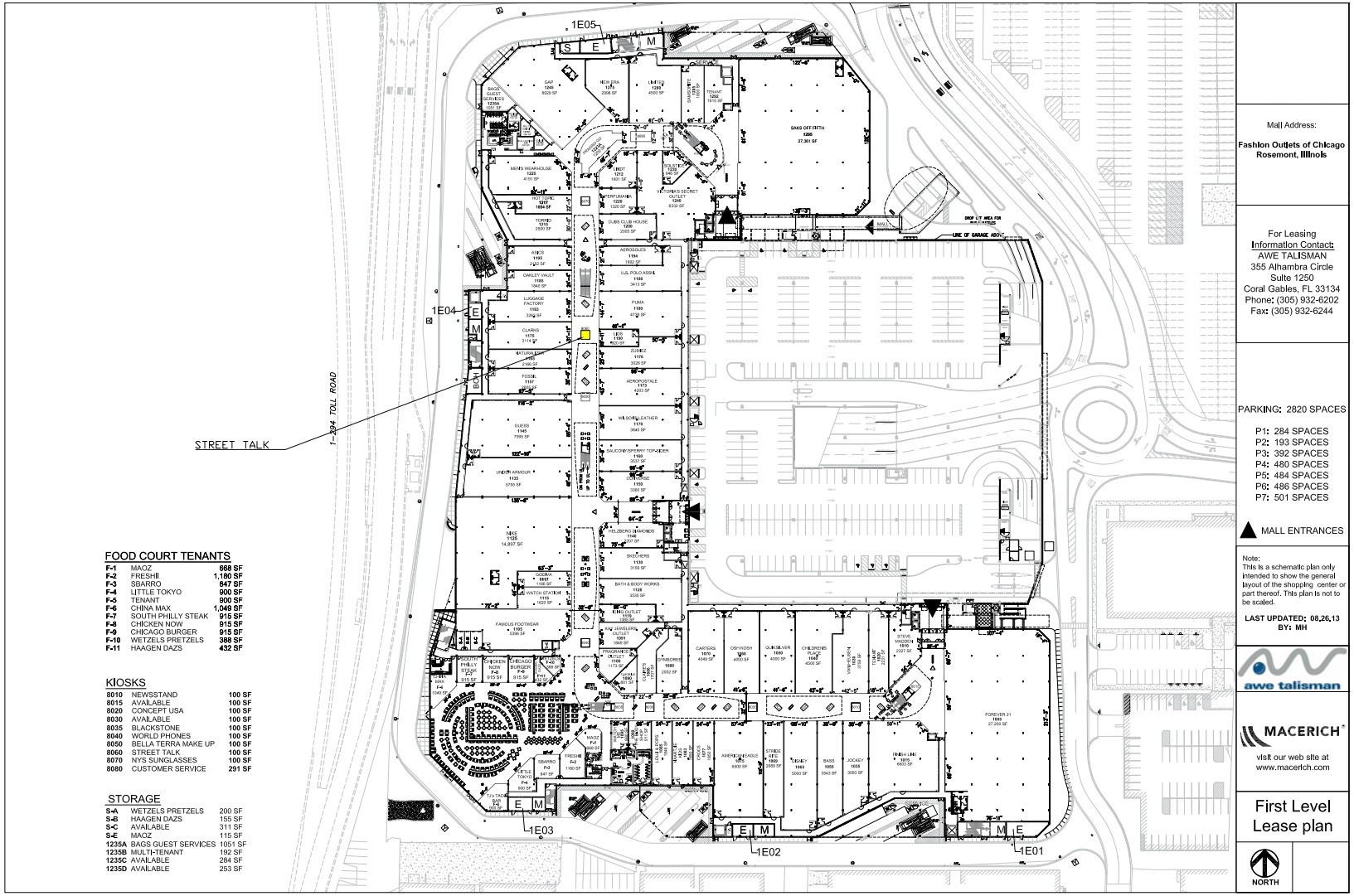
MALL LOCATION PLAN - SAMPLE TEMPLATE